GENERAL

1. PRIOR TO CONSTRUCTION THE CONTRACTOR SHALL CHECK AND VERIFY ALL DIMENSIONS AND EXISTING ELEVATIONS WHICH INCLUDE BUT ARE NOT LIMITED TO THE BENCHMARK ELEVATIONS, EXISTING SERVICE CONNECTIONS, AND EXISTING INVERTS. ANY INCONSISTENCIES AND OMISSIONS ON THIS DRAWING / DRAWING SET SHALL BE REPORTED TO THE ENGINEER FOR CLARIFICATION BEFORE COMMENCING THE WORK.
2. THE POSITION OF POLE LINES, CONDUITS, WATERMAINS, SEWERS AND OTHER UNDERGROUND AND ABOVE GROUND UTILITIES AND STRUCTURES ARE NOT NECESSARILY SHOWN ON THE CONTRACT DRAWINGS, AND WHERE SHOWN, THE ACCURACY OF THE POSITION OF SUCH UTILITIES AND STRUCTURES IS NOT GUARANTEED. BEFORE STARTING WORK, THE CONTRACTOR SHALL CONFIRM THE EXACT LOCATION OF ALL SUCH UTILITIES AND STRUCTURES, AND SHALL ASSUME ALL LIABILITY FOR DAMAGE TO THEM.
3. SURVEY EVIDENCE (MONUMENTS, IRON BARS, ETC.) SHALL NOT BE DISTURBED, DAMAGED, OR REMOVED.
4. COMPUTER DRAWING FILE CO-ORDINATES FOR THIS DRAWING SHALL NOT BE USED FOR CONSTRUCTION LAYOUT UNLESS SPECIFICALLY DIRECTED BY THE ENGINEER.
5. ALL WORK SHALL BE COMPLETED IN ACCORDANCE WITH THE OCCUPATIONAL HEALTH AND SAFETY ACT. THE GENERAL CONTRACTOR SHALL BE DEEMED TO BE THE CONSTRUCTOR AS DEFINED IN THE ACT.
6. ALL CONSTRUCTION SIGNAGE SHALL CONFORM TO THE MANUAL OF UNIFORM TRAFFIC CONTROL DEVICES FOR CANADA (MUTCDC) AND THE ONTARIO TRAFFIC MANUAL (OTM).
7. TOWN OF NIAGARA-ON-THE-LAKE STANDARD DRAWINGS AND ONTARIO PROVINCIAL STANDARD DRAWINGS (OPSD) SHALL APPLY WHEREVER RELEVANT, WHETHER SPECIFICALLY REFERENCED OR NOT.
8. ALL WORK SHALL BE IN ACCORDANCE WITH THE RELEVANT SECTIONS OF THE ONTARIO PROVINCIAL STANDARD SPECIFICATIONS (OPSS) AND DRAWINGS (OPSD), AND THE NIAGARA PENINSULA STANDARD CONTRACT DOCUMENT (NPSCD) UNLESS OTHERWISE NOTED ON THE DRAWINGS OR IN THE SPECIFICATIONS.
9. ALL MEASUREMENTS ARE IN METRES UNLESS OTHERWISE NOTED.
10. ALL GRANULAR MATERIAL SHALL BE COMPACTED TO 100% STANDARD PROCTOR MAXIMUM DRY DENSITY (SPMDD) AND ALL NATIVE BACKFILL SHALL BE COMPACTED TO 95% SPMDD UNLESS OTHERWISE NOTED.
11. ALL AREAS DISTURBED BY THE CONTRACTOR DURING THE CONSTRUCTION OF THE WORKS HEREIN, SHALL BE RESTORED TO ORIGINAL CONDITION OR BETTER AS DETERMINED BY THE ENGINEER. ALL GRASS AND VEGETATION COVERED AREAS SHALL BE RESTORED BY PLACING TOPSOIL (MINIMUM 100mm) AND SOD TO ESTABLISH A GRASS COVER TO THE SATISFACTION OF THE TOWN, UNLESS NOTED OTHERWISE.
12. SOD SHALL BE IN ACCORDANCE WITH OPSS 803. PLACED TOPSOIL SHALL BE IN ACCORDANCE WITH OPSS 802 AND FREE OF ALL GRANULAR PARTICLES OR OTHER MATERIALS DELETERIOUS TO PLANT GROWTH.

EROSION AND SEDIMENT CONTROL

13. EROSION AND SEDIMENT CONTROL WORKS SHALL BE INSTALLED AS SHOWN ON DRAWING 24086-CSS. SILTATION CONTROL MEASURES SHALL BE IN PLACE PRIOR TO THE START OF CONSTRUCTION AND MAINTAINED FOR THE DURATION.
14. SILT FENCE SHALL BE HEAVY-DUTY AS PER OPSD 219.130. GEOTEXTILE MATERIAL FOR ANY APPLICATION SHALL BE WOVEN WITH A WEAVE DENSITY OF 270R OR EQUIVALENT.
15. SILT FENCE INSTALLATION AND MAINTENANCE CONSIDERATIONS:
    - 15.1. GEOTEXTILE MATERIAL SHALL BE STRETCHED TIGHT DURING INSTALLATION AND THE BOTTOM EDGE BURIED A MINIMUM OF 150mm WITH COMPACTION OF THE EXCAVATED BACKFILL.
    - 15.2. CLEAR GRANULAR STONE PLACEMENT CAN BE USED IN FROZEN OR UNFROZEN CONDITIONS TO ASSIST IN FILTERING SEDIMENT LADEN WATERS.
    - 15.3. SILT FENCE SHALL BE INSPECTED REGULARLY AND AFTER EVERY RAINFALL TO IDENTIFY FAILED SECTIONS. ANY FAILURE SHALL BE REPAIRED IMMEDIATELY.
    - 15.4. WHEN SEDIMENT ACCUMULATES TO HALF THE HEIGHT OF THE GEOTEXTILE MATERIAL IT SHALL BE REMOVED AND DISPOSED OF IN A CONTROLLED AREA.
    - 15.5. A SUPPLY OF SILT FENCE SHALL BE KEPT ON SITE TO PROVIDE FOR QUICK REPAIRS OR ADDITIONAL FENCING REQUIREMENTS.
16. GEOTEXTILE MATERIAL SHALL BE PLACED UNDER THE GRATES IN ALL CATCH BASINS TO TRAP SEDIMENT. SILT TRAPS SHALL BE CLEANED REGULARLY BY THE CONTRACTOR AND SHALL NOT BE REMOVED UNTIL PAVEMENT OPERATION IS COMPLETED AND ALL VEGETATED AREAS ARE STABILIZED.

ROADS AND EARTHWORKS

17. WHERE DISTURBED OR DAMAGED, REINSTATEMENT OF EXISTING ROADS MUST COMPLY WITH THE REQUIREMENTS OF THE ROAD AUTHORITY. PAVEMENT REINSTATEMENT MUST COMPLY WITH OPSD 509.010 AND OPSS 310 & 314. SERVICE TRENCHES ARE TO BE SAWCUT SQUARE PRIOR TO PAVING OPERATION. MINIMUM ASPHALT AND GRANULAR THICKNESS FOR ROADWAY REINSTATEMENT SHALL MATCH EXISTING CONDITIONS, OR THE SCHEDULE BELOW, WHICHEVER IS GREATER:

SURFACE COURSE	40mm	HL3-HS
BINDER COURSE	80mm	HL8-HS
GRANULAR BASE	450mm	GRAN. 'A'
TOTAL THICKNESS	570mm	

STORM SEWERS

18. CONSTRUCTION OF STORM SEWERS SHALL BE IN ACCORDANCE WITH TOWN STANDARDS & SPECIFICATIONS (LATEST EDITION) AND MINISTRY OF ENVIRONMENT (MOE) GUIDELINES (LATEST EDITION).
19. SINGLE CATCH BASINS SHALL BE IN ACCORDANCE WITH OPSD 705.010.
20. CATCH BASIN FRAME AND GRATES SHALL BE PER OPSD 400.020.
21. ALL STORM SEWERS AND CATCHBASIN LEADS SHALL BE EITHER CONCRETE, CLASS III PER CSA A257.1 & A257.2 WITH CLASS "B" BEDDING PER OPSD 802.030, OR, PVC SDR-35 PER CSA 182.1 & 182.2 WITH GRANULAR 'A' EMBEDMENT PER OPSD 802.010, UNLESS OTHERWISE NOTED.
22. ALL STORM LATERALS TO BE 100mmø DR-28 PVC LAID AT 2% SLOPE CONNECTED TO PROPOSED STORM DETENTION SYSTEM AND CAPPED & STAKED OUTSIDE OF PROPOSED FOUNDATION.
23. STORM SEWER BEDDING SHALL BE PER OPSD 802 SERIES, WITH GRANULAR 'A' COVER. ALL BEDDING AND COVER MATERIAL SHALL BE COMPACTED TO 100% SPMDD.
24. MINIMUM CLEARANCE OF 200mm SHALL BE PROVIDED BETWEEN THE OUTSIDE OF THE PIPE BARRELS AT THE POINT OF PIPE CROSSING FOR SEWERS AND OTHER UTILITIES EXCEPT FOR WATERMAIN CROSSINGS WHEN THE MINIMUM CLEARANCE SHALL NOT BE LESS THAN 500mm. FOR WATERMAIN CROSSINGS WHERE A MINIMUM CLEARANCE OF 500mm CANNOT BE OBTAINED, THE CROSSING SHALL BE CONCRETE ENCASED.

SANITARY SEWERS

25. CONSTRUCTION OF SANITARY SEWERS SHALL BE IN ACCORDANCE WITH CITY STANDARDS & SPECIFICATIONS (LATEST EDITION) AND MINISTRY OF ENVIRONMENT (MOE) GUIDELINES (LATEST EDITION).
26. ALL SANITARY LATERALS TO BE 135mmø DR-28 PVC LAID AT 2% SLOPE AND CONNECTED TO EXISTING SEWER WITH APPROVED MANUFACTURED TEE AND CAPPED & STAKED NEAR THE STREETLINE. SANITARY SERVICE LATERALS SHALL BE CONSTRUCTED WITH A 100mmø PVC VERTICAL CLEANOUT CONNECTION AT THE PROPERTY LINE. ALL PROPOSED WYES AND BENDS SHALL BE OF 'SWEEP' OR 'LONG-RADIUS' TYPE.
27. ALL SANITARY LATERALS SHALL HAVE CLASS 'B' BEDDING PER OPSD 802.010, GRANULAR 'A' COVER MATERIAL AND SELECT NATIVE BACKFILL UNLESS OTHERWISE NOTED.
28. IN EXISTING ROADWAYS, SANITARY SEWER BEDDING SHALL BE AS PER OPSD 802 SERIES, WITH FULL GRANULAR 'A' COVER. ALL BEDDING AND COVER MATERIAL SHALL BE COMPACTED TO 100% SPMDD.
29. MINIMUM CLEARANCE OF 200mm SHALL BE PROVIDED BETWEEN THE OUTSIDE OF THE PIPE BARRELS AT THE POINT OF PIPE CROSSING FOR SEWERS AND OTHER UTILITIES EXCEPT FOR WATERMAIN CROSSINGS WHEN THE MINIMUM CLEARANCE SHALL NOT BE LESS THAN 500mm. FOR WATERMAIN CROSSINGS WHERE A MINIMUM CLEARANCE OF 500mm CANNOT BE OBTAINED, THE CROSSING SHALL BE CONCRETE ENCASED.

WATERMAIN

30. WATER SERVICES SHALL BE 25mmø TYPE 'K' SOFT COPPER AS PER OPSD 1104.010. ALL DOMESTIC WATER SERVICE CONNECTIONS SHALL HAVE MAINSTOPS (COMPRESSION TYPE FITTINGS) INSTALLED AT THE WATERMAIN EQUAL TO THE WATER SERVICE CONNECTION DIAMETER. CURB STOP AND VALVE BOX SHALL BE INSTALLED ON PROPERTY LINE. AT EACH SERVICE SADDLE WATERMAIN PIPE SHALL BE CORED BY A 19mmø 'SHELL' OR 'CORE' CUTTER AS RECOMMENDED BY THE PIPE MANUFACTURER. A HOLESAW, TWIST DRILL, SPADE OR AUGERING BIT WILL NOT BE PERMITTED UNDER ANY CIRCUMSTANCE.
31. CONNECTIONS TO EXISTING TOWN WATERMAINS SHALL BE BY TOWN FORCES UNLESS AUTHORIZED OTHERWISE.
32. MINIMUM DEPTH OF COVER OVER WATERMAIN AND SERVICES SHALL BE 1.7m FROM THE TOP OF PIPE TO THE FINISHED GROUND ELEVATION.

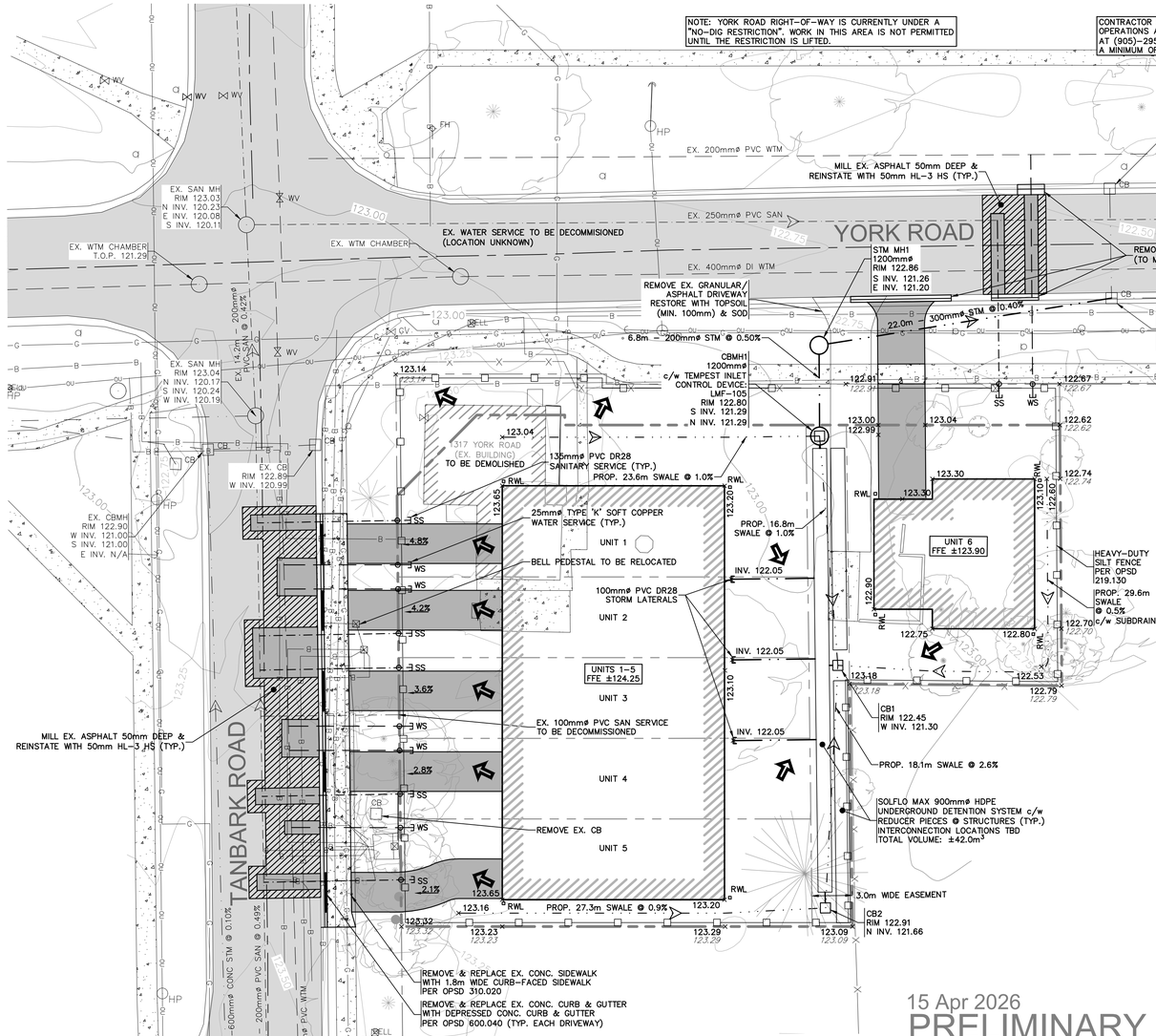

15 Apr 2026
PRELIMINARY

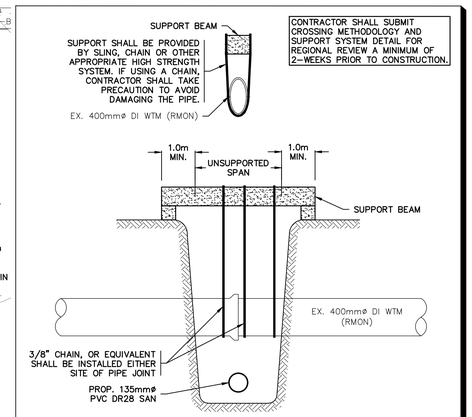

CONTRACTOR SHALL SUBMIT CROSSING METHODOLOGY AND SUPPORT SYSTEM DETAIL FOR REGIONAL REVIEW A MINIMUM OF 2-WEEKS PRIOR TO CONSTRUCTION.

NOTE: BEAM SHALL EXTEND TO 1.0m BEYOND THE SIDE OF THE TRENCH ON UNDISTURBED SOIL OR A DISTANCE EQUAL TO THE DEPTH OF THE PROPOSED EXCAVATION, WHICHEVER IS GREATER.

WATERMAIN SUPPORT DETAIL
N.T.S.

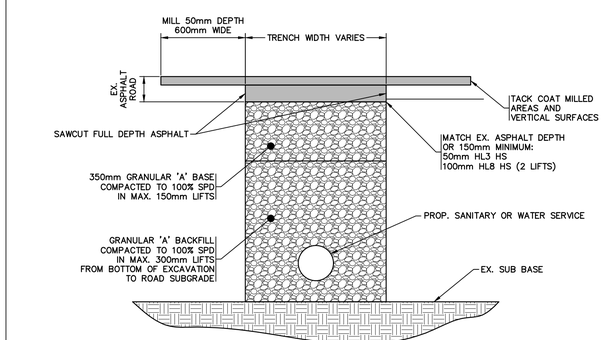

TYPICAL DETAIL FOR ROAD CUT TRENCH RESTORATION
N.T.S.

LEGEND

- 108.00 — EXISTING GROUND CONTOUR
- PROPERTY LINE
- EXISTING FENCE
- EXISTING GAS
- EXISTING BELL
- EXISTING OVERHEAD UTILITIES
- PROPOSED SILT FENCE
- 93.28 / 93.28 — PROPOSED GROUND ELEVATION / EXISTING GROUND ELEVATION
- PROPOSED BUILDING
- EXISTING BUILDING
- EXISTING ASPHALT
- PROPOSED ASPHALT
- EXISTING CONCRETE
- EXISTING WATERMAIN
- EXISTING SANITARY SEWER
- EXISTING CULVERT
- EXISTING DITCH
- WS — PROPOSED WATER SERVICE
- SS — PROPOSED SANITARY SERVICE & CLEAN OUT
- PROPOSED STORM SEWER
- PROPOSED SWALE
- CB — EXISTING CATCHBASIN
- EXISTING MAINTENANCE HOLE
- EXISTING CONIFEROUS TREE
- EXISTING DECIDUOUS TREE
- POST-DEVELOPMENT FLOW DIRECTION

issue		date	int.
C	OPA/ZBA RESUBMISSION	15 APR 2026	TC
B	OPA/ZBA RESUBMISSION	03 MAR 2026	TC
A	OPA/ZBA APPLICATION	10 JULY 2025	TC

seal

Do not scale drawings. Report any discrepancies to Quartek Group Inc. before proceeding.

Drawings must be sealed by the Architect and / or Engineer prior to the use for any building permit applications and / or government approval. Seals must be signed by the Architect and / or Engineer before drawings are used for any construction.

All construction to be in accordance with the current Ontario Building Code and all applicable Ontario regulations.

All drawings and related documents remain the property of Quartek Group Inc., all drawings are protected under copyright and under contract.

Quartek
Architects • Planners
Engineers • Project Managers
T 905 984 8676
89 - 91 St. Paul Street, Suite 100,
St. Catharines, ON, L2R 3M3
www.quartekgroup.com

project title
YORK ROAD RESIDENTIAL INFILL
1317 YORK ROAD, NIAGARA-ON-THE-LAKE

drawing title
CONCEPTUAL SITE SERVICING

drawn by	designed by
TC	TC
scale: 1:200	date: 10 JULY 2025
job number: 24086	issue: C

drawing number
24086-CSS

24"X36" Metric - Metric
P:\2024 Projects\24086 1317 York Rd NOTL\Drawings\Civil\24086 BP.dwg drawing tab: 24086-CSS
plotted by: tcrawford on Apr 15, 2026 - 12:51pm